STS06-80 D

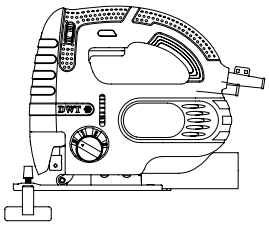

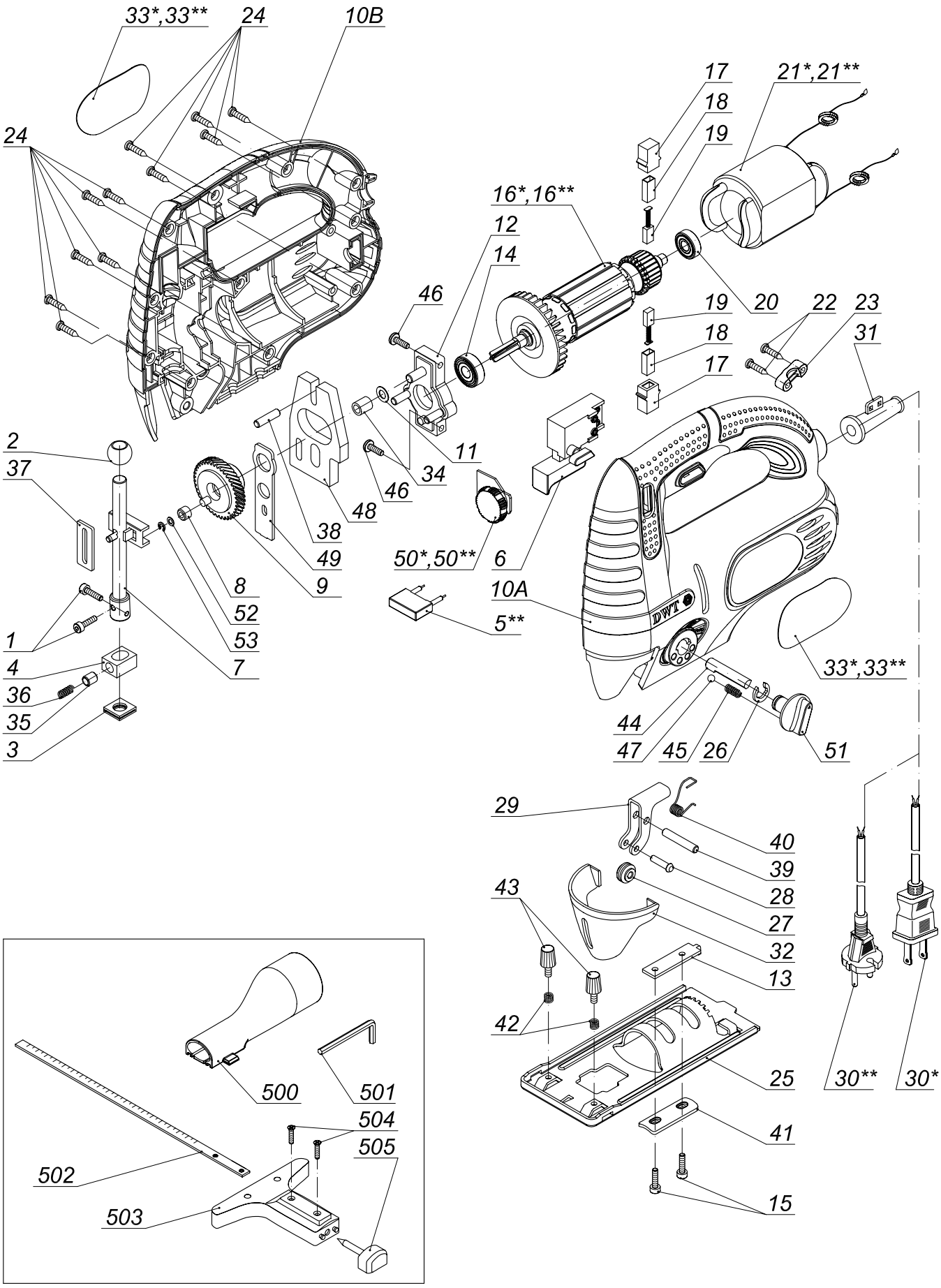

33*,33**
24
10B
24
17
18
19
21*,21**
16*,16**
12
14
46
19
20
22
23
18
31
17
2
37
11
34
46
48
38
49
50*,50**
6
8
9
10A
52
5**
1
53
7
4
36
35
3
33*,33**
44
47
45
26
51
29
40
39
28
43
27
32
13
42
25
30**
30*
41
15
500
501
504
505
502
503

DWT Sep-10 JIG SAW STS06-80 D

PRICE LIST OF SPARE PARTS

Pos.	Part Number	Description (Q-ty)	Description National Language (Q-ty)	Price, USD
1	S-208	Inner hexagon screw M4x8 (2)		
2	M-132	Upper sliding block		
3	M-133	Wool cushion		
4	M-134	Sliding block		
5**	E-005	Condenser 0.22μF 230V		
6	C-027	Switch		
7	L-074	Reciprocating bar		
8	P-030	Roller		
9	F-056	Gear		
10A	H-131	Housing A		
10B	H-132	Housing B		
11	S-009	Washer Ø6xØ14x0.2		
12	K-070	Bearing holder		
13	L-075	Positioning plate		
14	O-002	Ball bearing 608.RS		
15	S-046	Inner hexagon screw M4x14 (2)		
16*	1A-049	Armature 127V		
16**	A-049	Armature 230V		
17	J-031	Brush holder (2)		
18	J-032	Brush cover (2)		
19	D-013	Carbon brush (2)		
20	O-001	Ball bearing 607.RS		
21*	1B-043	Stator 127V		
21**	B-043	Stator 230V		
22	S-073	Screw ST4x12 (2)		
23	M-002	Cord clip		
24	S-075	Screw ST4x16 (11)		
25	N-127	Base		
26	S-209	"E" ring Ø10		
27	P-031	Roller for blade		
28	L-076	Pin for roller		
29	L-077	Roller support		
30*	1E-001	Cord 127V		
30**	E-001	Cord 230V		
31	M-062	Rubber sleeve		
32	P-032	Guard		
33*	1T-112	Brand label (2) 127V		
33**	T-112	Brand label (2) 230V		
34	O-045	Needle bearing HK060910		
35	N-128	Cap		
36	R-068	Spring Ø5x12		
37	M-135	Guide plate		
38	L-078	Pin Ø5x18		
39	L-079	Pin Ø5x30		
40	R-071	Twisted spring		
41	M-136	Clamp plate		
42	R-069	Spring Ø6x6 (2)		
43	S-210	Wing screw M4x10 type1 (2)		
44	K-083	Excenter shaft		
45	R-020	Spring Ø4x10		
46	S-081	Screw ST4x30 (2)		

47	R-002	Steel bal Ø 4		
48	M-137	Counterweight		
49	K-084	Pendulum rod		
50*	1C-028	VS wheel switch 127V		
50**	C-028	VS wheel switch 230V		
51	N-129	Knob		
52	S-211	Washer Ø6xØ12x1		
53	S-102	Circlip for shaft Ø6		
500	Q-084	Adapter		
501	Q-085	Hex.key 3		
502	Q-086	Ruler		
503	Q-087	Slide guide		
504	S-030	Screw M4x6 (2)		
505	Q-088	Alignment pin		